LOCUS MAP

NOT TO SCALE

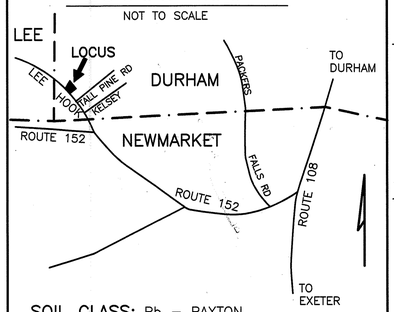

SOIL CLASS: Pb – PAXTON

SOURCE: SCS SOIL SURVEY

BENCH MARKS: DATUM: ASSUMED

#1 SET NAIL END RET WLL ELEV 48.20

#2 SET NAIL ROOT (4' OFF MAPLE) EL 48.06

#3 TOP EXISTING WELL ELEV 50.23

DESIGN INTENT:

THE BOTTOM OF THE EFFLUENT DISPOSAL SYSTEM (EDS) SHALL BE CONSTRUCTED AT ELEVATION 46.0 WHICH IS APPROXIMATELY 1.7' BELOW ORIGINAL GROUND AT THE HIGH CONTOUR OF THE DESIGNED EDS (ELEVATION 47.7).

SUITABLE REPLACEMENT AREA:

SYSTEM MUST BE REBUILT IN PLACE OR REDESIGNED.

LEGEND:

100 EXISTING CONTOUR
(100) PROPOSED CONTOUR
50.0 EXISTING SPOT ELEVATION
(50.0) PROPOSED SPOT ELEVATION

NOTES:

1. NOT TO BE DEEMED A BOUNDARY SURVEY. BOUNDARIES SHOWN ARE APPROXIMATE BASED ON: SCRD 1703-0111 AND MORTGAGE PLOT PLAN PROVIDED BY CLIENT
2. NHDES-WS&PCD SUBDIVISION APPROVAL NUMBER: N/A LOT OF RECORD
3. THIS SYSTEM IS NOT DESIGNED TO HANDLE GARBAGE DISPOSAL WASTE.
4. NO SURFACE WATER OR WELL WITHIN 75' OF PROPOSED LEACH FIELD.
5. NO HYDRIC A OR B SOILS WITHIN 100' OF PROPOSED SYSTEM.

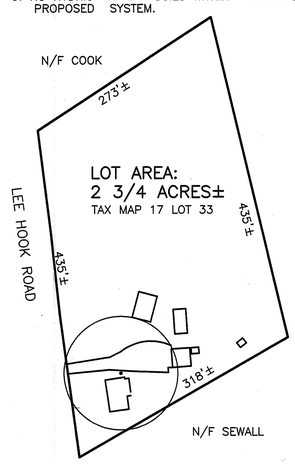

PLOT PLAN

1" = APPROX 100'

ALL COMPONENTS UNDER PAVEMENT OR DRIVEWAY TO BE H-20

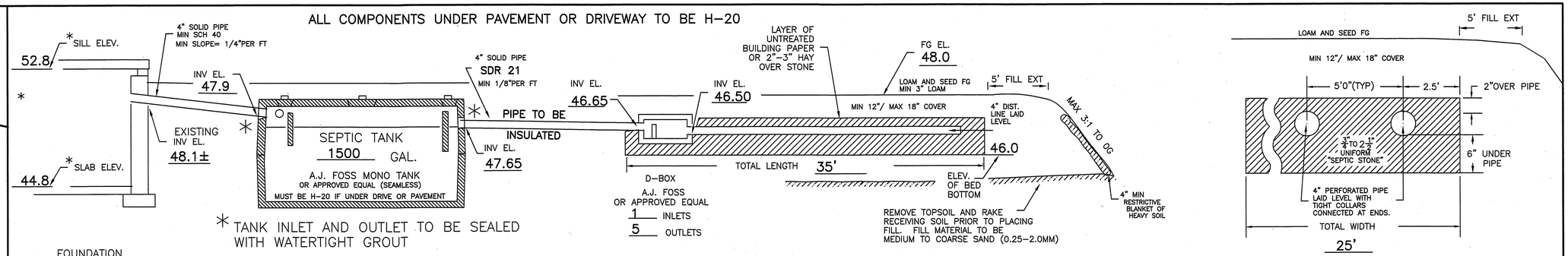

CROSS SECTION DISPOSAL SYSTEM – NOT TO SCALE

PLAN : 1"=20'

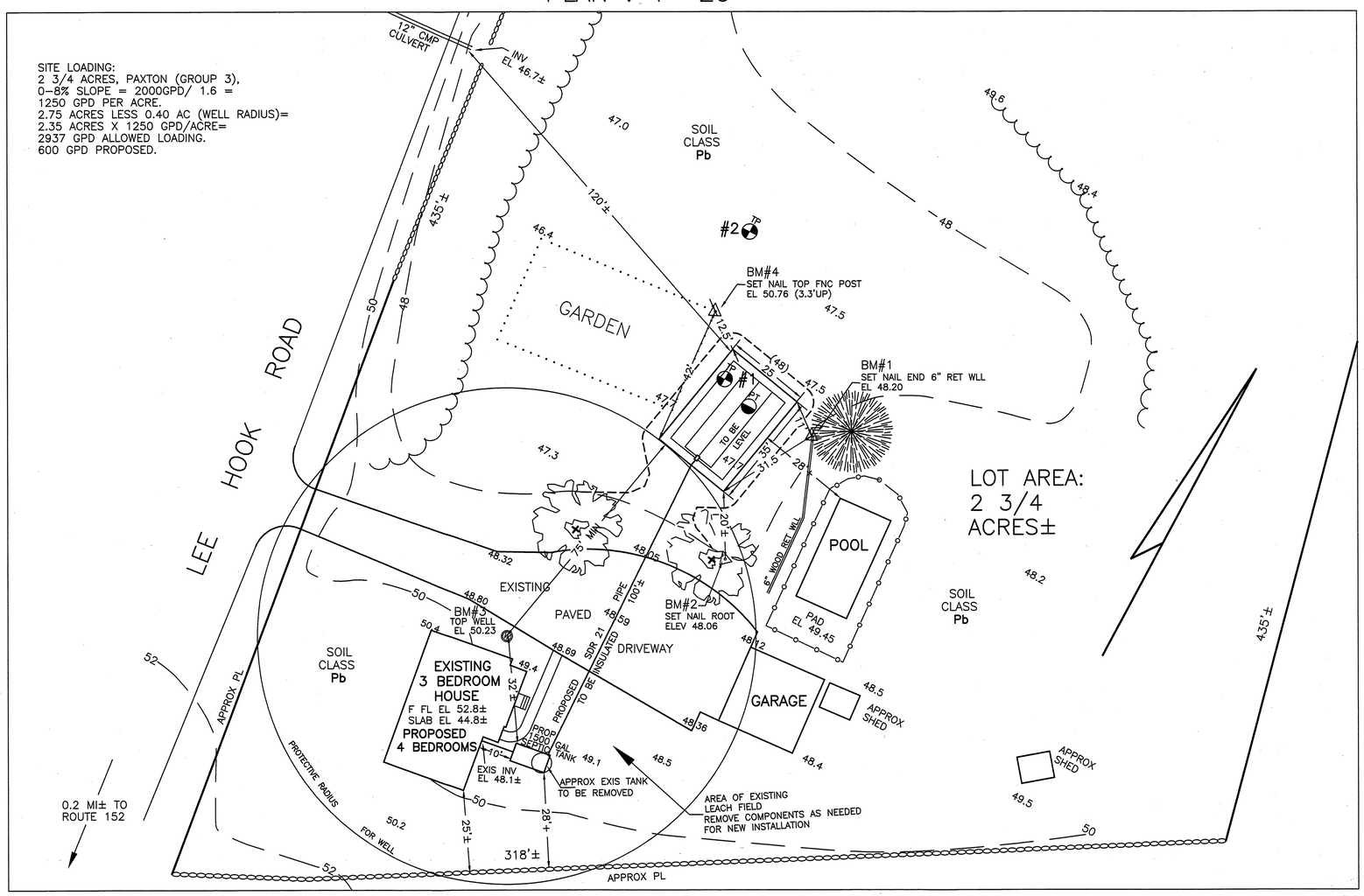

SYSTEM OWNER IS RESPONSIBLE FOR THE FOLLOWING OPERATING REQUIREMENTS ENV-WS 1023.01 (a) SEPTIC TANKS SHALL BE INSPECTED FOR ACCUMULATION OF SLUDGE AND SURFACE SCUM AT LEAST ONCE EVERY YEAR.
(b) WHEN THE COMBINED THICKNESS OF SLUDGE AND SURFACE SCUM EQUAL 1/3 OR MORE OF THE TANK DEPTH, THE TANK SHALL BE PUMPED BY A LICENSED SEPTIC TANK PUMPER.
ENV-WS 1023.02 TO PREVENT OBSTRUCTION OF THE DISTRIBUTION LINES AND LEACH FIELD, GREASE AND BULKY WASTE SHALL NOT BE FLUSHED OR OTHERWISE INTRODUCED INTO THE SEPTIC SYSTEM.
ENV-WS 1023.03 TOXIC AND HAZARDOUS MATERIALS SHALL NOT BE FLUSHED OR OTHERWISE INTRODUCED INTO THE SEPTIC SYSTEM.
ENV-WS 1023.04 TO PREVENT DAMAGE TO THE DISTRIBUTION LINES AND LEACH FIELD, VEHICLES, LIVESTOCK, AND OTHER HEAVY OBJECTS SHALL NOT BE ALLOWED ON THE LEACH FIELD.
ENV-WS 1023.05 IF WET AREAS APPEAR ON THE GROUND SURFACE ABOVE THE DISTRIBUTION LINES OR LEACH FIELD OR IF DISAGREEABLE ODORS OCCUR, THE SYSTEM SHALL BE INSPECTED FOR THE SOURCE OF THESE PROBLEMS, AND CORRECTIVE ACTION SHALL BE TAKEN.

TEST PIT DATA

TP

DATE: SEPTEMBER 2, 2003

TOWN INSPECTOR: TOM JOHNSON

TEST PIT #1 EL 47.5

0 –14"	10YR3/4 FINE SANDY LOAM (TOPSOIL)
14–30"	10YR5/6 TO 5/8 LOAMY SAND, GRAN FRIABLE
30–48"	2.5Y5/4 TO 5/6 MED SAND, LOOSE, SINGLE GRAIN
48–72"	2.5Y5/4 SILT LOAM, FIRM, FIRM IN PLACE, MOTTLED

ESHWT @ 48", NO OBSERVED WATER, NO REFUSAL

TEST PIT #2 EL 47.2

0 –14"	10YR3/4 FINE SANDY LOAM (TOPSOIL)
14–28"	10YR5/6 TO 5/8 LOAMY SAND, GRAN FRIABLE
28–36"	2.5Y5/4 LOAMY SAND, SOME SILTS SOMEWHAT FIRM, MOTTLED, RESTRICTIVE
36–44"	2.5Y5/4 TO 5/6 MED SAND, LOOSE, SINGLE GRAIN
44–64"	2.5Y5/4 SILT LOAM, FIRM IN PLACE, RESTRICTIVE

ESHWT @ 28", NO OBSERVED WATER, NO REFUSAL

PERC TEST DATA

PT

DATE 9/2/03

PERC RATE: < 2 MIN/IN

DESIGN LOADING: 4 BEDROOMS

AREA REQUIRED: 750 SQ FT

AREA PROPOSED: 25' X 35' = 875 SF PROVIDED

PROPOSED REPLACEMENT

SEPTIC SYSTEM PLAN

LOCUS: 341 LEE HOOK ROAD
DURHAM, NH

OWNER: MYRON [redacted] DIPPOLD
341 LEE HOOK ROAD
DURHAM, NH 03824

NEW HAMPSHIRE
Designer of Subsurface Disposal Systems
Ann W. Bialobrzeski
No. 348
Water Supply & Pollution Control

APPLICANT:
STOCKTON SERVICES
PO BOX 1306
HAMPTON, NH 03843-1306

DATE: 10/20/03

APPROVAL: CA2003057892